Cambridge International AS & A Level

Cambridge International Examinations
Cambridge International Advanced Subsidiary and Advanced Level

PHYSICS **9702/11**

Paper 1 Multiple Choice **May/June 2014**

1 hour

Additional Materials: Multiple Choice Answer Sheet
Soft clean eraser
Soft pencil (type B or HB is recommended)

7423041143

READ THESE INSTRUCTIONS FIRST

Write in soft pencil.
Do not use staples, paper clips, glue or correction fluid.
Write your name, Centre number and candidate number on the Answer Sheet in the spaces provided unless this has been done for you.
DO **NOT** WRITE IN ANY BARCODES.

There are **forty** questions on this paper. Answer **all** questions. For each question there are four possible answers **A**, **B**, **C** and **D**.
Choose the **one** you consider correct and record your choice in **soft pencil** on the separate Answer Sheet.

Read the instructions on the Answer Sheet very carefully.

Each correct answer will score one mark. A mark will not be deducted for a wrong answer.
Any working should be done in this booklet.
Electronic calculators may be used.

This document consists of **23** printed pages and **1** blank page.

© UCLES 2014

Data

speed of light in free space, $c = 3.00 \times 10^{8}\,\text{m s}^{-1}$

permeability of free space, $\mu_0 = 4\pi \times 10^{-7}\,\text{H m}^{-1}$

permittivity of free space, $\varepsilon_0 = 8.85 \times 10^{-12}\,\text{F m}^{-1}$

$\left(\dfrac{1}{4\pi\varepsilon_0} = 8.99 \times 10^{9}\,\text{m F}^{-1}\right)$

elementary charge, $e = 1.60 \times 10^{-19}\,\text{C}$

the Planck constant, $h = 6.63 \times 10^{-34}\,\text{J s}$

unified atomic mass constant, $u = 1.66 \times 10^{-27}\,\text{kg}$

rest mass of electron, $m_\text{e} = 9.11 \times 10^{-31}\,\text{kg}$

rest mass of proton, $m_\text{p} = 1.67 \times 10^{-27}\,\text{kg}$

molar gas constant, $R = 8.31\,\text{J K}^{-1}\,\text{mol}^{-1}$

the Avogadro constant, $N_\text{A} = 6.02 \times 10^{23}\,\text{mol}^{-1}$

the Boltzmann constant, $k = 1.38 \times 10^{-23}\,\text{J K}^{-1}$

gravitational constant, $G = 6.67 \times 10^{-11}\,\text{N m}^2\,\text{kg}^{-2}$

acceleration of free fall, $g = 9.81\,\text{m s}^{-2}$

© UCLES 2014

Formulae

uniformly accelerated motion, $s = ut + \frac{1}{2}at^2$

$v^2 = u^2 + 2as$

work done on/by a gas, $W = p\Delta V$

gravitational potential, $\phi = -\frac{Gm}{r}$

hydrostatic pressure, $p = \rho gh$

pressure of an ideal gas, $p = \frac{1}{3}\frac{Nm}{V}\langle c^2 \rangle$

simple harmonic motion, $a = -\omega^2 x$

velocity of particle in s.h.m., $v = v_0 \cos \omega t$

$v = \pm \omega \sqrt{(x_0^2 - x^2)}$

electric potential, $V = \frac{Q}{4\pi\varepsilon_0 r}$

capacitors in series, $1/C = 1/C_1 + 1/C_2 + \ldots$

capacitors in parallel, $C = C_1 + C_2 + \ldots$

energy of charged capacitor, $W = \frac{1}{2}QV$

resistors in series, $R = R_1 + R_2 + \ldots$

resistors in parallel, $1/R = 1/R_1 + 1/R_2 + \ldots$

alternating current/voltage, $x = x_0 \sin \omega t$

radioactive decay, $x = x_0 \exp(-\lambda t)$

decay constant, $\lambda = \frac{0.693}{t_{\frac{1}{2}}}$

© UCLES 2014

[Turn over

1 Which pair of units contains one derived unit and one SI base unit?

A ampere coulomb

B kilogram kelvin

C metre second

D newton pascal

2 What is equivalent to 2000 microvolts?

A $2\,\mu J\,C^{-1}$ **B** $2\,mV$ **C** $2\,pV$ **D** $2000\,mV$

3 The speed v of a liquid leaving a tube depends on the change in pressure ΔP and the density ρ of the liquid. The speed is given by the equation

$$v = k\left(\frac{\Delta P}{\rho}\right)^n$$

where k is a constant that has no units.

What is the value of n?

A $\frac{1}{2}$ **B** 1 **C** $\frac{3}{2}$ **D** 2

Space for working

© UCLES 2014

4 An experiment is carried out to measure the resistance of a wire.

The current in the wire is $(1.0 \pm 0.2)\,\text{A}$ and the potential difference across the wire is $(8.0 \pm 0.4)\,\text{V}$.

What is the resistance of the wire and its uncertainty?

A $(8.0 \pm 0.2)\,\Omega$

B $(8.0 \pm 0.6)\,\Omega$

C $(8 \pm 1)\,\Omega$

D $(8 \pm 2)\,\Omega$

5 The Young modulus of the material of a wire is to be found. The Young modulus E is given by the equation below.

$$E = \frac{4Fl}{\pi d^2 x}$$

The wire is extended by a known force and the following measurements are made.

Which measurement has the largest effect on the uncertainty in the value of the calculated Young modulus?

	measurement	symbol	value
A	length of wire before force applied	l	$2.043 \pm 0.002\,\text{m}$
B	diameter of wire	d	$0.54 \pm 0.02\,\text{mm}$
C	force applied	F	$19.62 \pm 0.01\,\text{N}$
D	extension of wire with force applied	x	$5.2 \pm 0.2\,\text{mm}$

Space for working

© UCLES 2014

6 A tennis ball is thrown horizontally in air from the top of a tall building.

If the effect of air resistance is **not** negligible, what happens to the horizontal and vertical components of the ball's velocity?

	horizontal component of velocity	vertical component of velocity
A	constant	constant
B	constant	increases at a constant rate
C	decreases to zero	increases at a constant rate
D	decreases to zero	increases to a maximum value

7 An object is thrown with velocity $5.2\,m\,s^{-1}$ vertically upwards on the Moon. The acceleration due to gravity on the Moon is $1.62\,m\,s^{-2}$.

What is the time taken for the object to return to its starting point?

A 2.5 s **B** 3.2 s **C** 4.5 s **D** 6.4 s

Space for working

© UCLES 2014

8 The graph shows how the acceleration of an object moving in a straight line varies with time.

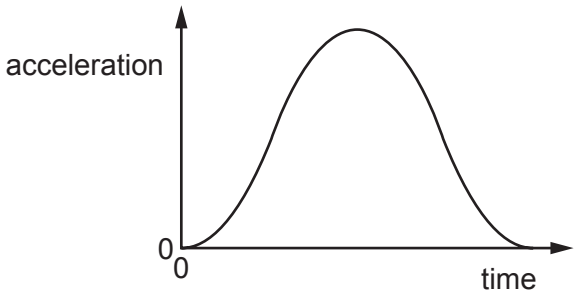

The object starts from rest.

Which graph shows the variation with time of the velocity of the object over the same time interval?

A

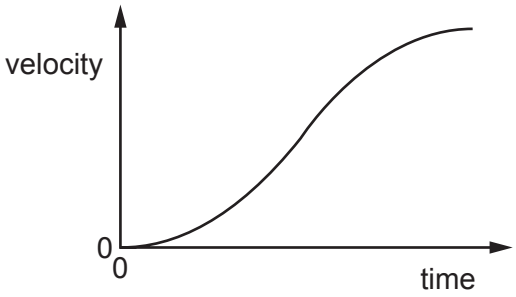

B

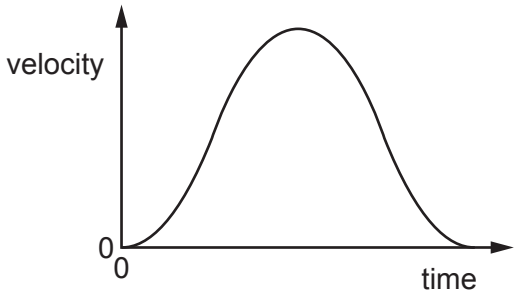

C

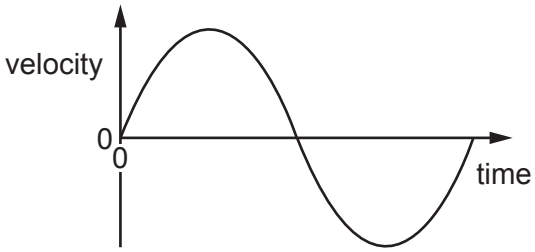

D

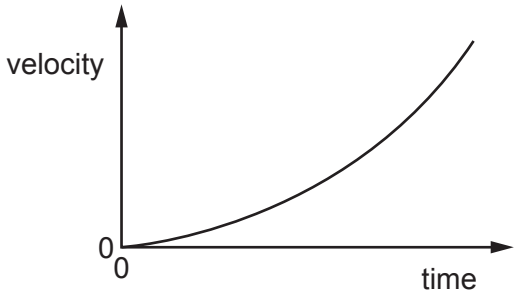

Space for working

9 An object of mass 4.0 kg moving with a speed of 3.0 m s^{-1} strikes a stationary object in an inelastic collision.

Which statement is correct?

A After collision, the total kinetic energy is 18 J.

B After collision, the total kinetic energy is less than 18 J.

C Before collision, the total kinetic energy is 12 J.

D Before collision, the total kinetic energy is less than 12 J.

10 The graph shows how the momentum of a motorcycle changes with time.

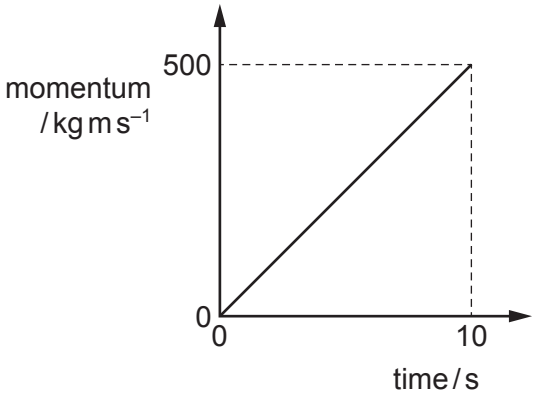

What is the resultant force on the motorcycle?

A 50 N **B** 500 N **C** 2500 N **D** 5000 N

Space for working

11 The diagrams show two ways of hanging the same picture.

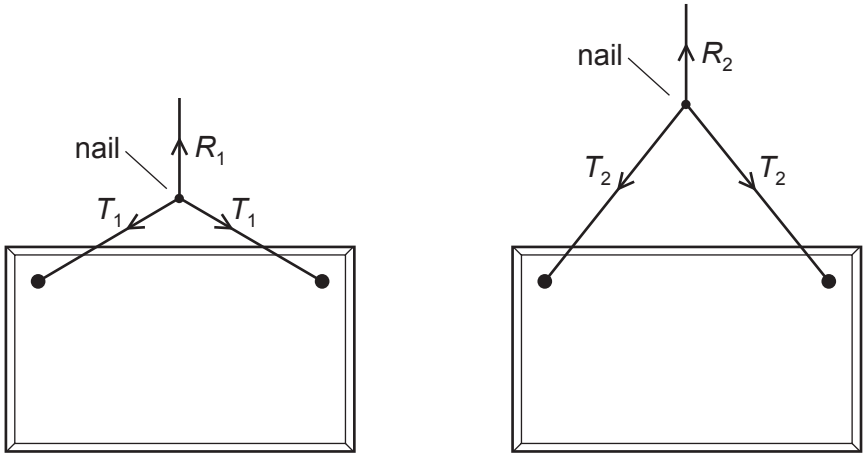

diagram 1 diagram 2

In both cases, a string is attached to the same points on the picture and looped symmetrically over a nail in a wall. The forces shown are those that act on the nail.

In diagram 1, the string loop is shorter than in diagram 2.

Which information about the magnitude of the forces is correct?

A $R_1 = R_2$ $T_1 = T_2$

B $R_1 = R_2$ $T_1 > T_2$

C $R_1 > R_2$ $T_1 < T_2$

D $R_1 < R_2$ $T_1 = T_2$

Space for working

© UCLES 2014

12 A man holds a 100 N load stationary in his hand. The combined weight of the forearm and hand is 20 N. The forearm is held horizontal, as shown.

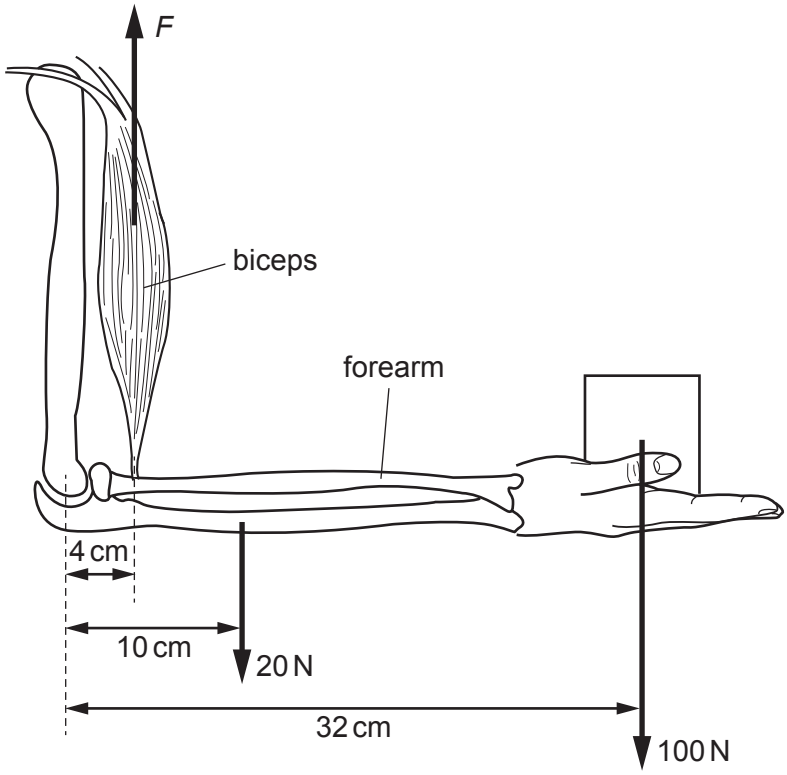

What is the vertical force *F* needed in the biceps?

A 750 N **B** 800 N **C** 850 N **D** 900 N

Space for working

13 A spindle is attached at one end to the centre of a lever of length 1.20 m and at its other end to the centre of a disc of radius 0.20 m. A string is wrapped round the disc, passes over a pulley and is attached to a 900 N weight.

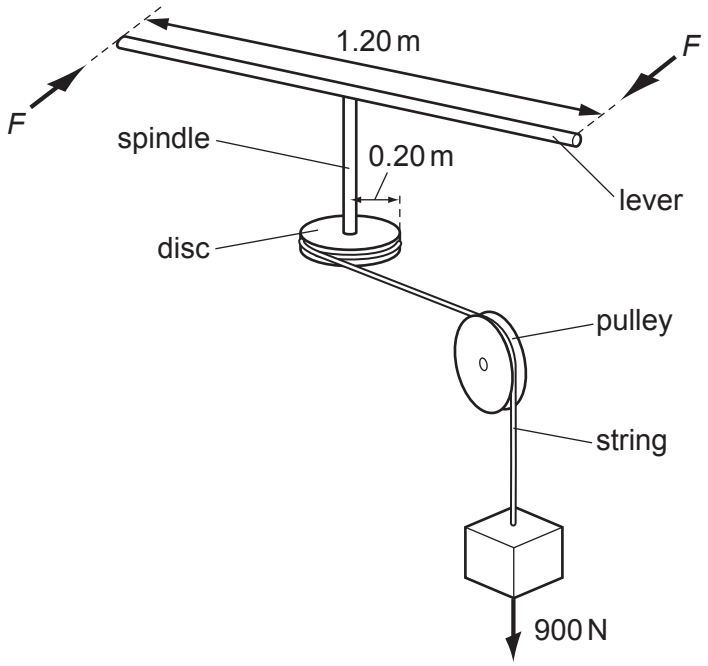

What is the minimum force *F*, applied to each end of the lever, that could lift the weight?

A 75 N **B** 150 N **C** 300 N **D** 950 N

Space for working

14 What is the average power output of a laser that can deliver 0.20 J of energy in 10 ns?

A 2 nW **B** 20 mW **C** 200 kW **D** 20 MW

15 A weight *W* hangs from a trolley that runs along a rail. The trolley moves horizontally through a distance *p* and simultaneously raises the weight through a height *q*.

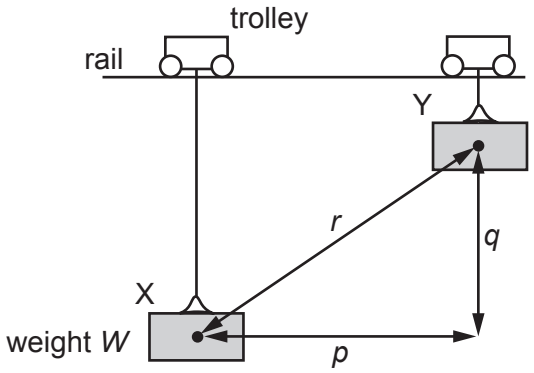

As a result, the weight moves through a distance *r* from X to Y. It starts and finishes at rest.

How much work is done on the weight during this process?

A *Wp* **B** *W*(*p* + *q*) **C** *Wq* **D** *Wr*

16 The engine of a car exerts a force of 600 N in moving the car 1.0 km in 150 seconds.

What is the average output power of the engine?

A 4.0 W **B** 4.0 kW **C** 90 kW **D** 90 MW

17 Which statement about boiling and evaporation is correct?

A Boiling can only occur at the surface of a liquid.

B Evaporation can only occur at a fixed temperature.

C Only boiling involves a change of phase.

D When some of a liquid evaporates, the rest of the liquid becomes cooler.

Space for working

© UCLES 2014

18 There is one temperature, about 0.01 °C, at which water, water vapour and ice can co-exist in equilibrium.

Which statement about the properties of the molecules at this temperature is correct?

A Ice molecules are closer to one another than water molecules.

B The mean kinetic energy of water molecules is greater than the mean kinetic energy of ice molecules.

C Water vapour molecules are less massive than water molecules.

D Water vapour molecules have the same mean speed as both ice and water molecules.

19 A crystalline solid is heated at a constant rate and the change of temperature with time is shown in the graph below.

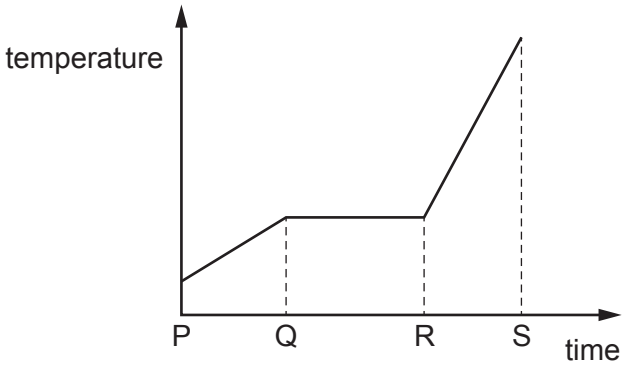

Which statement about the particles in the material is correct?

A In the time from P to Q, the particles are arranged randomly.

B In the time from Q to R, some particles are arranged regularly and some particles are arranged randomly.

C In the time from R to S, the particles are widely spaced.

D The arrangement of the particles is the same in the time from P to S.

Space for working

20 The stress-strain graphs for three different materials are shown, not drawn to the same scales.

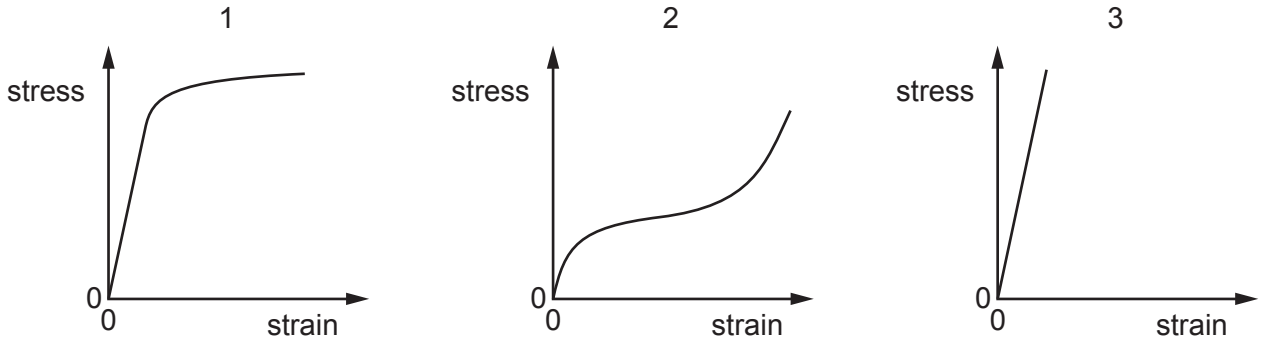

The three materials are copper, rubber and glass.

Which materials are represented by the graphs?

	1	2	3
A	copper	glass	rubber
B	copper	rubber	glass
C	glass	copper	rubber
D	glass	rubber	copper

Space for working

21 The graph is a load-extension graph for a wire undergoing elastic deformation.

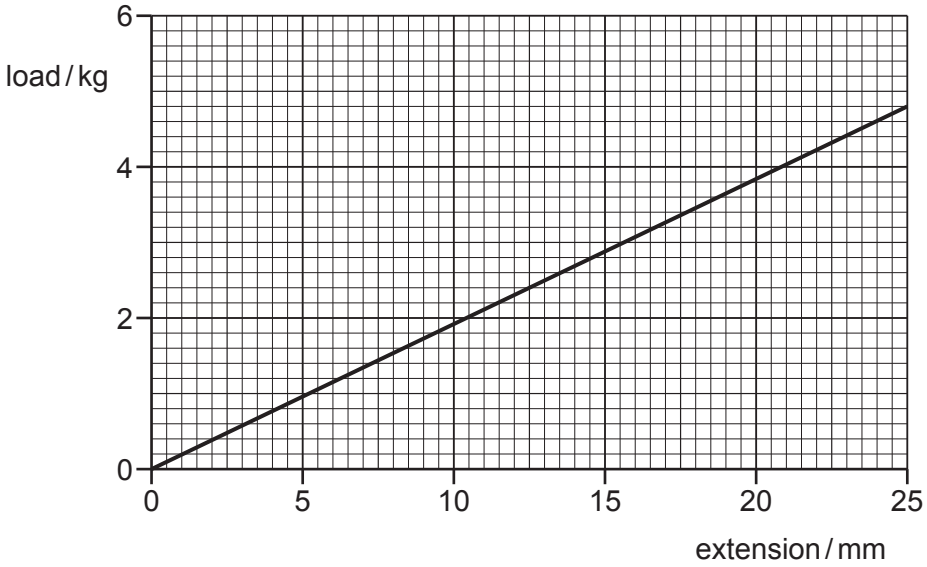

How much work is done on the wire to increase the extension from 10 mm to 20 mm?

A 0.028 J **B** 0.184 J **C** 0.28 J **D** 0.37 J

22 Which statement about longitudinal waves is correct?

A Longitudinal waves include radio waves travelling through air.

B Particles in a longitudinal wave vibrate at right-angles to the direction of transfer of wave energy.

C Some types of longitudinal wave can be polarised.

D Stationary waves can be produced by the superposition of longitudinal waves.

23 The order of magnitude of the frequency of the longest-wavelength ultraviolet waves can be expressed as 10^x Hz.

What is the value of x?

A 13 **B** 15 **C** 17 **D** 19

Space for working

24 The speed v of waves in deep water is given by the equation

$$v^2 = \frac{g\lambda}{2\pi}$$

where λ is the wavelength of the waves and g is the acceleration of free fall.

A student measures the wavelength λ and the frequency f of a number of these waves.

Which graph should he plot to give a straight line through the origin?

A f^2 against λ

B f against λ^2

C f against $\frac{1}{\lambda}$

D f^2 against $\frac{1}{\lambda}$

25 A stationary wave on a stretched string is set up between two points P and T.

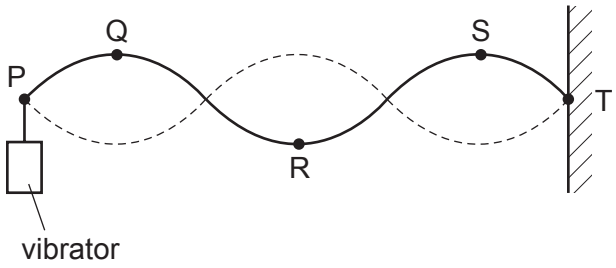

Which statement about the wave is correct?

A Point R is at a node.

B Points Q and S vibrate in phase.

C The distance between P and T is three wavelengths.

D The wave shown has the lowest possible frequency.

Space for working

© UCLES 2014

26 A parallel beam of white light passes through a diffraction grating. Orange light of wavelength 600 nm in the fourth order diffraction maximum coincides with blue light in the fifth order diffraction maximum.

What is the wavelength of the blue light?

A 450 nm **B** 480 nm **C** 500 nm **D** 750 nm

27 The basic principle of note production in a horn is to set up a stationary wave in an air column.

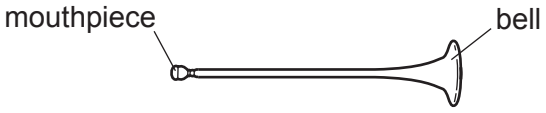

horn

For any note produced by the horn, a node is formed at the mouthpiece and an antinode is formed at the bell. The frequency of the lowest note is 75 Hz.

What are the frequencies of the next two higher notes for this air column?

	first higher note / Hz	second higher note / Hz
A	113	150
B	150	225
C	150	300
D	225	375

Space for working

© UCLES 2014

28 A horizontal beam of electrons is passed between two horizontal parallel plates, 2.0 cm apart, as shown.

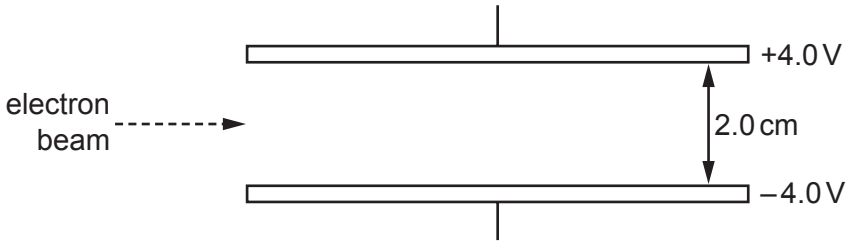

The upper plate has an electrical potential of +4.0 V, and the lower plate has an electrical potential of –4.0 V.

What is the force on each electron when between the plates?

A 3.2×10^{-17} N downwards

B 3.2×10^{-19} N upwards

C 6.4×10^{-19} N downwards

D 6.4×10^{-17} N upwards

29 The diagram shows two points P and Q which lie 90° apart on a circle of radius *r*.

A positive point charge at the centre of the circle creates an electric field of magnitude *E* at both P and Q.

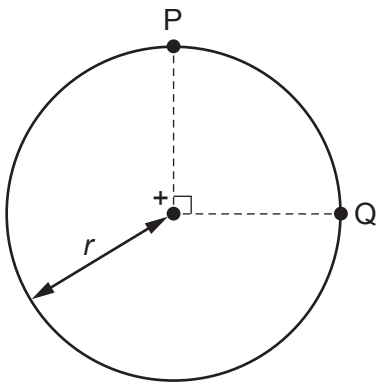

Which expression gives the work done in moving a unit positive charge from P to Q?

A 0 **B** $E \times r$ **C** $E \times \left(\frac{\pi r}{2}\right)$ **D** $E \times (\pi r)$

Space for working

30 Two electrically-conducting cylinders X and Y are made from the same material.

Their dimensions are as shown.

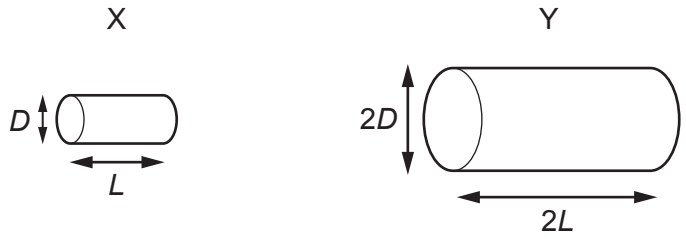

The resistance between the ends of each cylinder is measured.

What is the ratio $\frac{\text{resistance of X}}{\text{resistance of Y}}$?

A $\frac{2}{1}$ **B** $\frac{1}{1}$ **C** $\frac{1}{2}$ **D** $\frac{1}{4}$

31 A battery, with a constant internal resistance, is connected to a resistor of resistance 250 Ω, as shown.

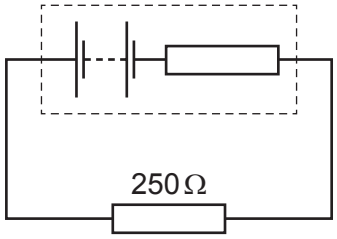

The current in the resistor is 40 mA for a time of 60 s. During this time 6.0 J of energy is lost in the internal resistance.

What are the energy supplied to the external resistor during the 60 s and the e.m.f. of the battery?

	energy / J	e.m.f. / V
A	2.4	2.4
B	2.4	7.5
C	24	10.0
D	24	12.5

Space for working

© UCLES 2014

32 Which symbol represents a component whose resistance is designed to change with temperature?

A

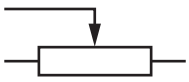

B

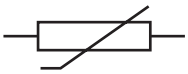

C



D

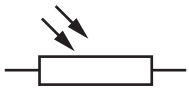

33 In the circuit below, a voltmeter of resistance R_V and an ammeter of resistance R_A are used to measure the resistance R of the fixed resistor.

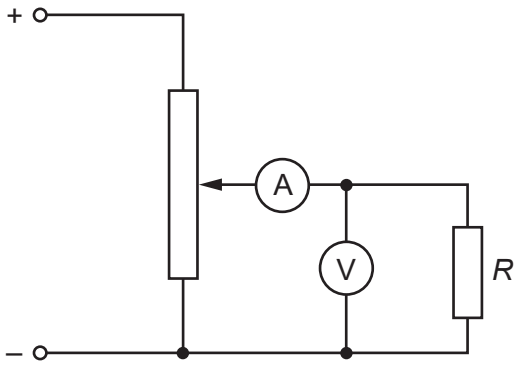

Which condition is necessary for an accurate value to be obtained for R?

A R is much smaller than R_V.

B R is much smaller than R_A.

C R is much greater than R_V.

D R is much greater than R_A.

Space for working

© UCLES 2014

34 In the circuit shown, all the resistors are identical and all the ammeters have negligible resistance.

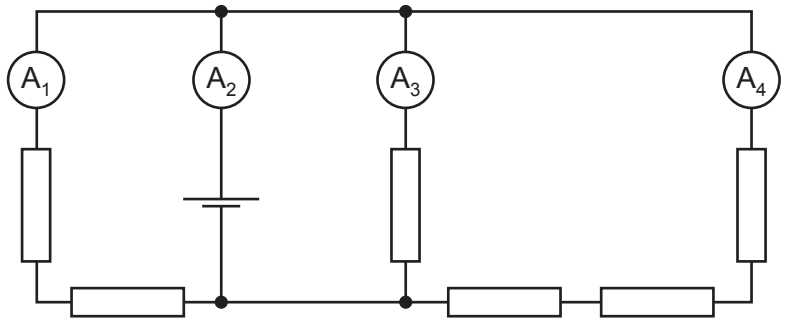

The reading on ammeter A_1 is 0.6 A.

What are the readings on the other ammeters?

	reading on ammeter A_2 / A	reading on ammeter A_3 / A	reading on ammeter A_4 / A
A	1.0	0.3	0.1
B	1.4	0.6	0.2
C	1.8	0.9	0.3
D	2.2	1.2	0.4

35 The potential difference across a component in a circuit is 2.0 V.

How many electrons must flow through this component in order for it to be supplied with 4.8 J of energy?

A 2.6×10^{18} **B** 1.5×10^{19} **C** 3.0×10^{19} **D** 6.0×10^{19}

Space for working

© UCLES 2014

36 What is the total resistance between points P and Q in this network of resistors?

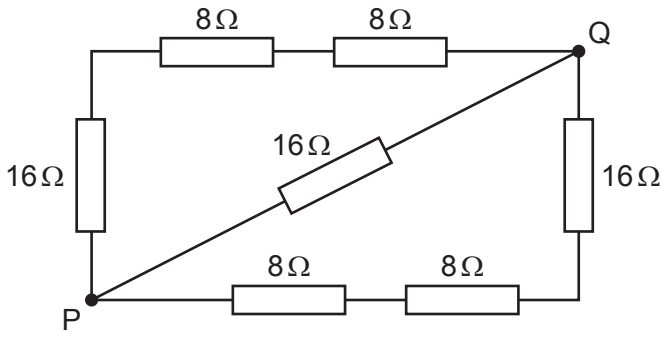

A 8Ω **B** 16Ω **C** 24Ω **D** 32Ω

37 Alpha, beta and gamma radiations have various depths of penetration in matter and different charges.

Which row best summarises the penetration and charge of each radiation?

	alpha	beta	gamma
A	absorbed by a sheet of card negative charge	absorbed by several mm of aluminium no charge	not fully absorbed by several cm of lead no charge
B	absorbed by a sheet of card negative charge	absorbed by several mm of aluminium positive charge	not fully absorbed by several cm of lead no charge
C	absorbed by a sheet of card positive charge	absorbed by several mm of aluminium negative charge	not fully absorbed by several cm of lead no charge
D	absorbed by several mm of aluminium positive charge	not fully absorbed by several cm of lead negative charge	absorbed by a sheet of card no charge

Space for working

© UCLES 2014

38 In 2002, two-proton radioactive decay of an isotope of iron, $^{45}_{26}Fe$, was observed.

What could be the resulting product?

A $^{43}_{26}Fe$ **B** $^{43}_{24}Cr$ **C** $^{45}_{24}Cr$ **D** $^{47}_{28}Ni$

39 U^{++} is a doubly-ionised uranium atom. The uranium atom has a nucleon number of 235 and a proton number of 92.

In a simple model of the atom, how many particles are in this ionised atom?

A 235 **B** 325 **C** 327 **D** 329

40 The grid shows a number of nuclides arranged according to the number of protons and the number of neutrons in each.

A nucleus of the nuclide $^{8}_{3}Li$ decays by emitting a β-particle.

What is the resulting nuclide?

number of protons

	0	1	2	3	4	5	6
4					**A**	**B**	
3				$^{6}_{3}Li$	$^{7}_{3}Li$	$^{8}_{3}Li$	
2		$^{3}_{2}He$	$^{4}_{2}He$			**C**	**D**
1	$^{1}_{1}H$	$^{2}_{1}H$					

number of neutrons

Space for working

© UCLES 2014

BLANK PAGE

Permission to reproduce items where third-party owned material protected by copyright is included has been sought and cleared where possible. Every reasonable effort has been made by the publisher (UCLES) to trace copyright holders, but if any items requiring clearance have unwittingly been included, the publisher will be pleased to make amends at the earliest possible opportunity.

Cambridge International Examinations is part of the Cambridge Assessment Group. Cambridge Assessment is the brand name of University of Cambridge Local Examinations Syndicate (UCLES), which is itself a department of the University of Cambridge.